PoWer TIG 2000 AC/DC Pulse

GeKaMac®

PoWer TIG 2000 AC/DC Pulse Users Manual

Please Read and Understand This Manual
Before Operating The Welding Machine

www.gedikkaynak.com.tr

This machine is for internal use only.

It complies with the WEEE Directive.

This machine has been designed in accordance with the EN 60974-1 and EN 60974-10 standards.

The machine is safe when installation, operation, and maintenance are performed in accordance with the user manual and regulations. The operator and machine owner are responsible for adhering to safety rules.

Gedik Kaynak San. Ve Tic. A.Ş. assumes no responsibility for safety or CE compliance if any modifications are made to the machine or if safety rules are not followed.

This Class A equipment is not suitable for use in homes and similar residential areas where the power supply is provided by the low-voltage public electricity network.

This machine is not household waste and cannot be disposed of in the trash.

When the machine reaches the end of its service life or becomes obsolete, it must be disposed of in accordance with regulations.

COMPLIES WITH THE WEEE DIRECTIVE.

Eco Design Statement

This machine has been designed and manufactured in accordance with the requirements of the 2009/125/EC Eco Design Directive concerning the environmentally friendly design of energy-related products.

Accordingly, machines with an idle mode are as follows.

	Idle Mode
MMA	**X**
MIG	√
TIG	√
Plazma	√
SAW	**Out of Scope**

Efficiency measurements should be conducted only on the power unit. The water cooling system should be disabled. For more information on measurements and machine settings, Gedik Kaynak Sanayi ve Ticaret A.Ş. should be consulted.

Dear Customer

This instruction manual will help you get to know your new machine. Read the manual carefully and you will soon be familiar with all the many great features of your new product. Meanwhile, please remember well safety rules and operate as instruction.

If you treat your product carefully, this definitely helps to prolong its enduring quality and reliability things which are both essential prerequisites for getting outstanding results.

Production specification may change without advance notice.

The model you purchase is for:

ATIG2000AC DC Pulse

Please find corresponding models from the "Contents".

Important:

Please take special note of safety rules and operate as instruction in case of damage and serious injury.

Safety Rules

“Danger” indicates an imminently hazardous situation which, if not avoided, will result in death or serious injury.

“Warning!” indicates a possible hazardous situation which, if not avoided, could result in death or serious injury. The possible hazards are explained in the text.

“Caution” indicates a possible hazardous situation which, if not avoided, may result in slight or moderate injury.

“Note!” indicates a situation which implies a risk of impaired welding result and damage to the equipment.

“Important!” indicates practical tips and other useful special-message. It is no signal word for a harmful or dangerous situation.

Utilisation for intended purpose only

- The machine may only be used for jobs as defined by the “Intended purpose”.
- Utilisation for any other purpose, or in any other manner, shall be deemed to be “not in accordance with the intended purpose”. The manufacturer shall not be liable for any damage resulting from such improper use.

Safety signs

- All the safety instructions and danger warnings on the machine must be kept in legible condition, not removed, not be covered, pasted or painted cover.

Safety inspection

- The owner/operator is obliged to perform safety inspection at regular intervals.
- The manufacturer also recommends every 3-6 months for regular maintenance of power sources.

Electric shock can kill

- Touching live electrical parts can cause fatal shocks or severe burns. The electrode and work circuit is electrically live whenever the output is on. The input power circuit and machine internal circuits are also live when power is on. In MIG/MAG welding, the wire, drive rollers, wire feed housing and all metal parts touching the welding wire are electrically live. Incorrectly installed or improperly grounded equipment is a hazard.
- Do not touch live electrical parts of the welding circuit, electrodes and wires with your bare skin or wet clothing.
- The operator must wear dry hole-free insulating welding gloves and body protection while performs the welding.
- Insulate yourself from work and ground using dry insulating protection which is large enough to prevent you full area of physical contact with the work or ground.
- Connect the primary input cable according to rules. Disconnect input power or stop machine before installing or maintenance.
- If welding must be performed under electrically hazardous conditions as follow: in damp locations or wearing wet clothing; on metal structures such as floors, gratings, or scaffolds; when in cramped positions such as sitting, kneeling, or lying; or in occasion when there is a high risk of unavoidable or accidental contact with the work piece or ground. Must use additional safety precautions: semiautomatic DC constant voltage (wire) welder, DC manual (Stick) welder and AC welder with reduced open-load voltage.
- Maintain the electrode holder, ground clamp, welding cable and welding machine in good, safe operating condition. Replace damaged part immediately.

Electric and magnetic fields (EMF) may be dangerous

- If electromagnetic interference is found to be occurring, the operator is obliged to examine any possible electromagnetic problems that may occur on equipment as follow:

- minas, signal and data-transmission leads
- IT and telecoms equipment
- measurement and calibration devices
- Wearers of pacemakers

- Measures for minimizing or preventing EMC problems:

- Mains supply

If electromagnetic interference still occurs, despite the fact that the mains connection in accordance with the regulations, take additional measures

- Welding cables

Keep these as short as possible

Connect the work cable to the work piece as close as possible to the area being welded.

Lay tem well away from other cables.

Do not place your body between your electrode and work cables.

- Equipotential bonding
- Workpiece grounding (earthing)
- Shielding

Shield the entire welding equipment and other equipment nearby.

ARC rays can burn

- Visible and invisible rays can burn eyes and skin.
- Wear an approved welding helmet or suitable clothing made from durable flame-resistant material (leather, heavy cotton, or wool) to protect your eyes and skin from arc rays and sparks when welding or watching.
- Use protective screens or barriers to protect other nearby personnel with suitable, non-flammable screening and/or warn them not to watch the arc nor expose themselves to the arc rays or to hot spatter or material.

Fumes and gases can be dangerous

- Welding may produce fumes and gases, breathing these fumes and gases can be hazardous to your health.
- When welding, keep your head out of the fume. If inside, ventilate the area at the arc to keep fumes and gases away from the breathing zone. If ventilation is not good, wear an approved air-supplied respirator.
- Work in a confined space only if it is well ventilated, or while wearing an air-supplied respirator.
- Welding fumes and gases can displace air and lower the oxygen level causing injury or death. Always use enough ventilation, especially in confined areas, to insure breathing air is safe.

Welding and cutting sparks can cause fire or explosion

- When not welding, make sure the electrode circuit is not touching the work or ground. Accidental contact can cause sparks, explosion, overheating, or fire. Make sure the area is safe before doing any welding.
- Welding and cutting on closed containers, such as tanks, drums, or containers, can cause them to blow up. Make sure proper steps have been taken.
- When pressure gas is used at the work site, special precautions are required to prevent hazardous situations.
- Connect work cable to the work as close to the welding zone as practical to prevent welding current from passing too long and creating fire hazards or overheat.
- Wear oil-free protective garments such as leather gloves, heavy shirt, cuffless trousers, high shoes, and a cap. Wear ear plugs when welding out of position or in confined places. Always wear safety glasses with side shields when in a welding area.
- Be attention that welding sparks and hot materials from welding can easily go through small cracks and openings to adjacent areas and start a fire. Remove fire hazardous from the welding area, if not possible, cover them thoroughly. Do not weld where flying sparks can strike flammable material and where the atmosphere may contain flammable dust, gas, or liquid vapors (such as gasoline).
- Protect yourself and others from flying sparks and hot metal. Remove any combustibles from operator before perform any welding.
- Keep a fire extinguisher readily available.
- Empty containers, tanks, drums, or pipes which have combustibles before perform welding.
- Remove stick electrode from electrode holder or cut off welding wire at contact tip when not in use.
- Apply correct fuses or circuit breakers. Do not oversize or bypass them.

Cylinder can explode if damaged

- Pressure gas cylinders contain gas under high pressure. If damaged, a cylinder can explode. Since gas cylinders are normally part of the welding process, be sure to treat them carefully.
- Cylinders should be located away from areas where they may be struck or subjected to physical damage. Use proper equipment, procedures, and sufficient number of persons to lift and move cylinders.
- Always install cylinders in an upright position by securing to a stationary support or cylinder rack to prevent falling over or tipping.
- Keep a safe distance from arc welding or cutting operations and any other source of heat, sparks, or flame.
- No touching cylinder by welding electrode, electrode holder or any other electrically “hot” parts. Do not drape welding cables or welding torches over a gas cylinder.
- Use only correct compressed gas cylinders, regulators, hoses, and fittings designed for the process used; maintain them and associated parts in good condition.
- Use only compressed gas cylinders containing the correct shielding gas for the and properly operating regulators designed for the gas and pressure used. All hoses, fittings, etc. should be suitable for the application and maintained in good condition.
- Open the cylinder valve slowly and keep your head and face away from the cylinder valve outlet.
- Valve protection caps should be kept in place over valve expect when the cylinder is in use or connected for use.

Hot parts can burn

- Do not touch hot parts with bare hand or skin.
- Ensure equipment is cooled down before perform any work.
- If touching hot parts is needed, use proper tools and/or wear heavy, insulated welding gloves and clothing to prevent burns.

Flying metal or dirt can injure eyes

- When welding, chipping, wire brushing, and grinding can cause sparks and flying metal. It can hurt your eyes.
- Remember wear appropriate safety glasses with side shields when in welding zone, even under your welding helmet.

Noise can damage hearing

- Noise from some processes or equipment can damage hearing.
- Remember wear approved ear protection to protect ears if noise level is high.

Moving parts can injure

- Stay away from moving parts such as fans.
- Stay away from pinch points such as drive rolls.
- Keep all doors, panels, covers, and guards closed and securely in place.
- Have only qualified persons remove doors, panels, covers, or guards for servicing and maintenance.
- Reinstall doors, panels, covers, or guards when servicing and maintenance is finished and before reconnecting input power.

Overuse can cause overheating

- Use machine follow duty cycle. Reduce current or reduce duty cycle before starting to weld again.
- Allow cooling period.
- Do not block or filter airflow to unit.

Safety markings

- Equipment with CE-markings fulfils the basic requirements of the Low-Voltage and Electromagnetic Compatibility Guideline (e.g. relevant product standards according to EN 60 974).

Safety markings

- The equipment with the CCC mark meets the basic requirements stipulated in the Chinese standards GB / T15579.1-2013 and GB / T8118.

Contents

1-GENERAL REMARKS 9
1-1 Power source features 9
1-2 Functional principle 10
1-3 Output characteristics 10
1-4 Duty cycle 11
1-5 Applications 11
1-6 Warning label 11
2- VERSIONS BRIEFS 12
3-BEFORE COMMISSIONING 13
3-1 Utilization for intended purpose only 13
3-2 Machine installation rules 13
3-3 Power source connection 13
3-4 Welding cables instruction 14
4-PoWer TIG 2000AC DC Pulse 15
4-1 System components 15
4-2 Basic equipments for welding 16
4-3 Interface 17
4-4 Control panel 18
4-5 Submenu 23
4-6 SAVE/CALL function 24
4-7 Other functions 25
4-8 Installation 26
4-9 Technical data 29

4-10 Disassembly and reassembly 31

6 –TROUBLE SHOOTING.....35

7–CARE AND MAINTENANCE.....37

1-GENERAL REMARKS

1-1 Power source features

The power source is controlled by microcomputer, has DC MMA, AC MMA, DC TIG, DC pulse TIG, AC TIG, AC pulse TIG, mixed waveform TIG welding process, which are used for carbon steel, stainless steel, copper, titanium, aluminum and Al-Mg alloy welding. With ideal static characteristic and dynamic characteristics, comprehensive control functions, PoWer TIG 2000 ACDC Pulse enjoys.

Features and benefits:

-Single phase AC 230V power supply, small size, light weight and easy to move.

-Good control and adjust ability, multi-function, save cost.

-APFC power factor correction technology, low harmonic content, less pollution to the grid.

-Easy arc-starting, stable arc, less spatter and excellent welding.

-HF ignition, easy to operate.

-Foot pedal switch optional for welding current control.

-By adjusting parameters like peak current, base current, pulse frequency, duty cycle as well as AC current, AC frequency, clean ratio, it can control the welding penetration, welding width, welding seam surface, and extend the tungsten electrode life.

-Multiple patented technology, high reliability and durability.

1-2 Functional principle

This welding machine applies HF inverter technology. 1- phase 230V input volt is rectifified, fifiltered, and voltage stabilized by PFC circuit, inverted into HF AC by IGBT single tube, reduced by HF transformer, rectifified by HF rectififier, then output DC power suitable for welding. After this process, the welding machine's dynamically responsive speed has been greatly increased, so the welding machine size and weight are reduced noticeably.

Special design of control circuit makes welding machines keep good welding performance despite of external condition changes like grid voltage flfluctuation or different output cable length. Good features include easy arc start, stable arc, good welding seam and continuous adjustment of welding current. Schematic diagram is shown in Fig. 1-2-1:

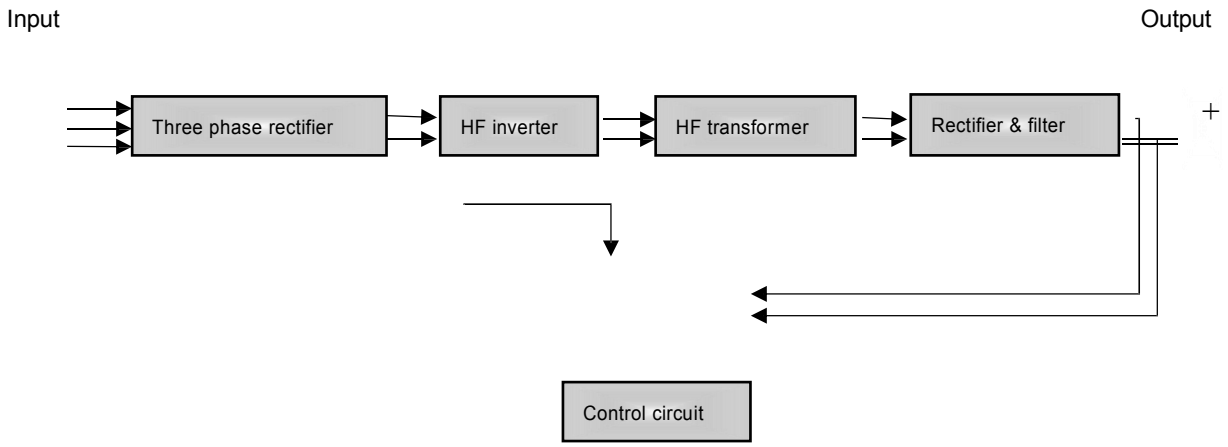

Fig. 1-2-1: Schematic diagram

1-3 Output characteristics

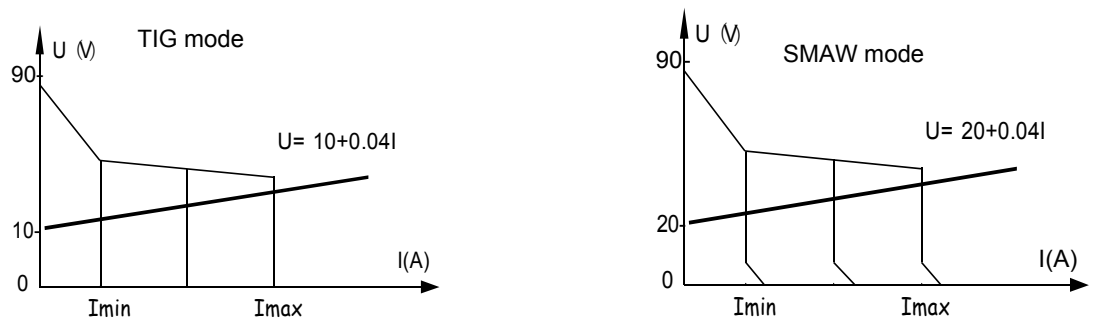

Fig. 1-3-1: Output characteristic

1-4 Duty cycle

Duty cycle is percentage of 10 minutes that a machine can weld at rated load without overheating. If overheats, thermostat(s) will open, output stops. Wait for fifteen minutes for the machine to cool down. Reduce amperage or duty cycle before welding.

NOTE! Exceeding duty cycle can damage unit and void warranty.

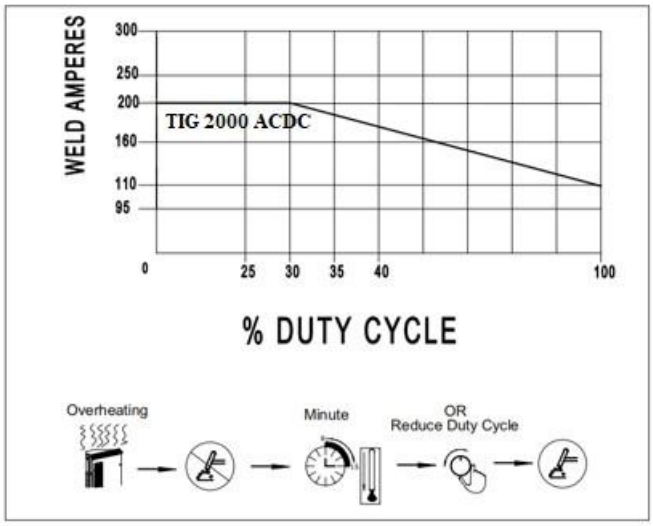

Fig. 1-4-1: Duty cycle

1-5 Applications

The power source is suitable for mild steel, alloy steel, stainless steel, copper, silver , titanium,aluminum and ALmg alloy welding, and is designed for the following recommended areas:

-Non-ferrous metals (aluminum and ALmg alloy) industry

-Hardware production

-Building decoration installation

-Small sheet metal factory

-Chemical pipeline installation and maintenance

-Home and individual processing

1-6 Warning label

The warning label is affixed onto the top of the power source, and it must not be removed or painted over.

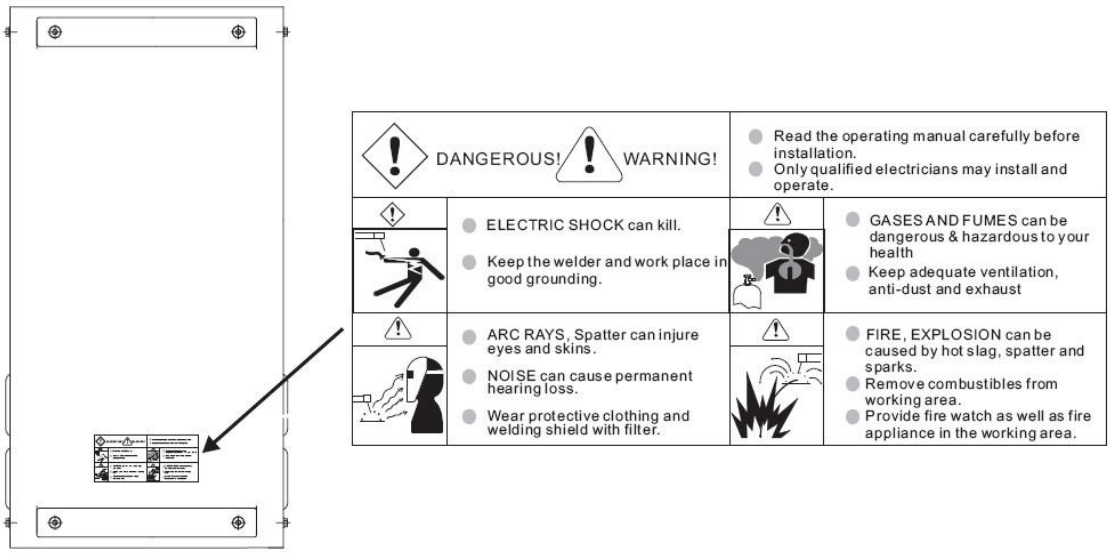

Fig. 1-6-1: Warning label

2- VERSIONS BRIEFS

Professional welding of special materials requires special welding parameters. Different models of the power sources are matched to different welding.

- **PoWer TIG 2000 AC DC Pulse**

Digital control panel. Accurate preset and adjustable parameters. Suitable for thin plate pulse mode welding. The rated welding current degree is 210A for this series.

3-BEFORE COMMISSIONING

Warning! Operating the equipment incorrectly can cause serious injury and damage. Do not use the functions described here until you have read and completely understood “safety rules”.

3-1 Utilization for intended purpose only

The power source may only be used for STICK and TIG welding. Utilization for other purposes, or in any other manner, shall be deemed to be "not in accordance with the intended purpose". The manufacturer shall not be liable for any damage resulting from such improper use.Operate, inspect and maintain should follow all the instructions given in this manual.

3-2 Machine installation rules

According to test, protection degree of this power source is IP23S However, the internal key components must be protected from direct soaking.

Warning! A machine that topples over or falls from its stand can cause injury. Place equipment on an even, firm floor in such a way that it stands firmly.

The venting duct is very important for safety protections. When choosing the machine location, make sure it is possible for the cooling air to freely enter and exit through the louvers on the front and back of machine. Any electro conductive metallic dust like drillings must not be allowed to get sucked into the machine.

3-3 Power source connection

- The power source is designed to run on the voltage given on the nameplate.
- The mains cables and plugs must be mounted in accordance with the relevant technical standards.
- The power supply sockets that come with power source are designed to use strictly according to the marked voltages.

Note!Inadequately dimensioned electrical installations can lead to serious damage. The mains lead, and its fuseprotection, must be dimensioned in accordance with the local power supply. The technical data shown on thenameplate shall apply.

3-4 Welding cables instruction

When welding, please pay attention to the followings:

a. The welding cables should be kept as short as possible;

b. If extended cable is used, please do as shown in Fig. 3-4-1.

Wrong Coil the excess ground cable and weldingcable in same direction respectively.	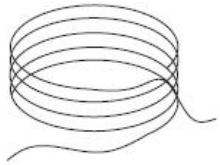
Correct Straighten the ground cable and weldingcable and make them close to each other. Bundle the ground cable and welding cabletogether, running the wires close to theground.	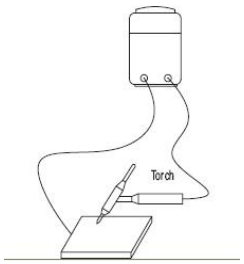
Correct When the excess cables are only be used byrolling up, coil the cables to two windings inreverse direction and overlap them. The number of turns for A is same as thenumber for B. Handle the welding cable and ground cableaccording to above-mentioned method.	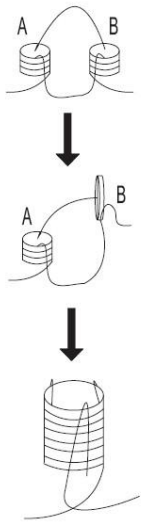

Fig. 3-4-1 Welding cables instruction

4-POWER TIG 2000 AC DC Pulse

4-1 System components

This series of machines can be equipped with many different accessories and can be used in various special sites with different configurations.

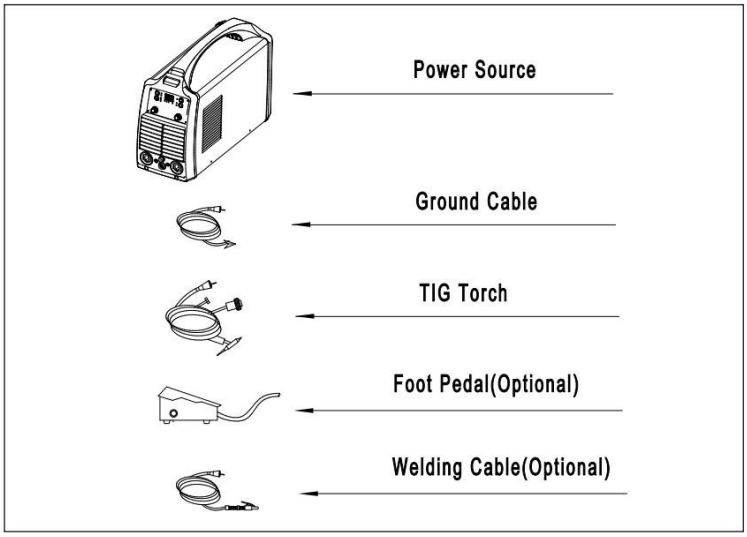

Fig. 4-1-1: System components

4-2 Basic equipments for welding

Basic equipments are needed for normal welding. Below are the lists: TIG:

- Power source
- Ground cable
- TIG torch
- Gas input parts (provide protective gas)
- Pressure-reduce regulator
- wire (according to different applications) STICK:
- Power source
- Ground cable
- Welding cable
- Electrode

4-3 Interface

Note! You may find that your machine has certain functions or some parameters that are not described in this operating manual. Also, certain illustrations may be very slightly different from the actual controls on your machine. However, these controls function in exactly the same way.

Front panel

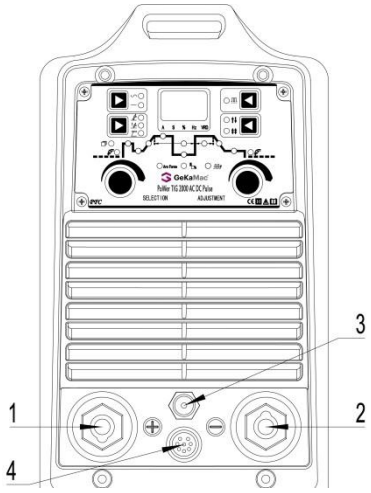

Fig. 4-3-1: Front panel

1. Welding cable quick socket (+)

In TIG mode, connect with work piece;

In SMAW mode, connect with electrode holder.

2. Welding cable quick socket (-)

In TIG mode, connect with TIG torch;

In SMAW mode, connect with work piece.

3. Gas outlet

Connect with TIG torch gas connector.

4. Control socket

Connect with TIG torch, foot pedal, or control cable of automation system.

Rear panel

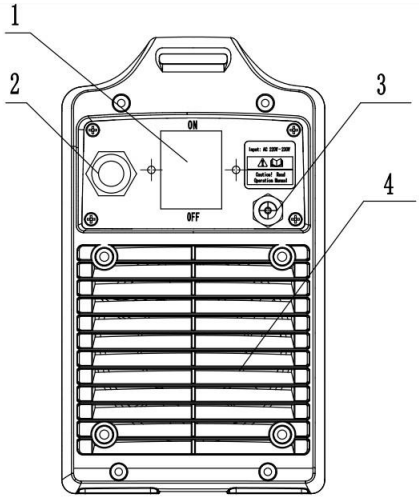

Fig. 4-3-2: Rear panel

1.Power switch

Supply power single phase 230Vac for welding machine by this switch. When switch "ON",power light and LED light up, and the fan runs.

2.Power supply cable

Three pin wires, the mixed-colored wire must be firmly grounded; the rest 2 wires connect to 1-phase AC230V 50/60Hz power supply.

3.Gas inlet

Connect gas regulator via gas hose

4.Fan

Cool down heating device inside welding machine

4-4 Control panel

The functions on the control panel are all arranged in a very logical way. The various parameters needed for welding are easy to select, by pressing the appropriate button.

Note! Your machine has certain functions that are not in accordance with this operating manual, or vice versa. Also, certain illustrations may be slightly different from the actual controls on your machine. However, these controls function in exactly the same way.

Warning! Operating the equipment incorrectly can cause serious injury and damage.Do not use the functions described here until you have read and completely understood this operating manual.

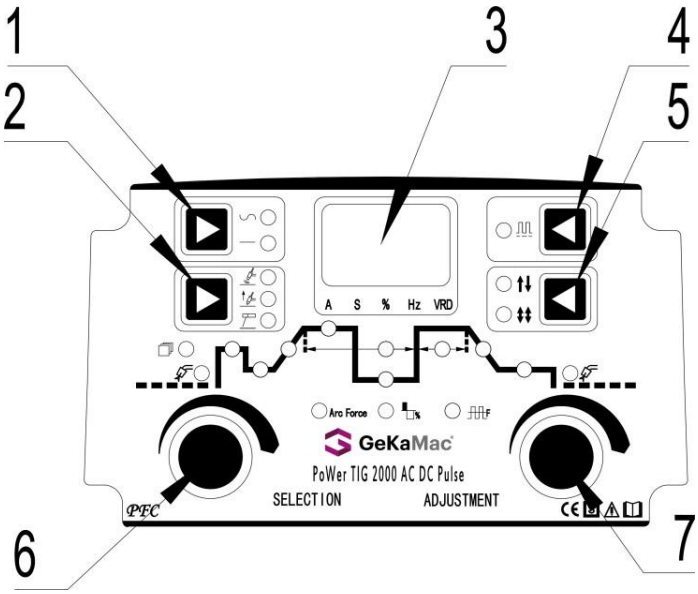

Fig. 4-4-1: Control panel

1.AC/DC selection button: select between AC, DC, mixed waveform on TIG mode, select between AC, DC on MMA mode.

Important! When the two indicator lights light up, it means the machine is on mixed waveform TIG mode.

2.Function selection button: select between HF TIG, Lift TIG, MMA.

3.Digital displayer

4.Pulse selection button: On TIG mode, to switch between constant current and pulse, when the indicator light lights up, It's pulse mode, when the indicator light lights off, it's constant current mode.

5.Operating mode selection button: on TIG mode, select between 2 step, 4 step.

Torch operation mode:

Legend:

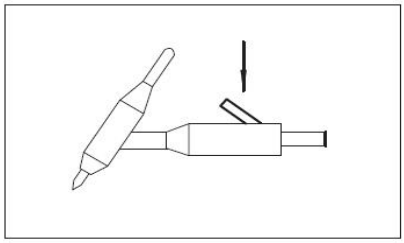

Fig. 4-4-2: Press torch trigger

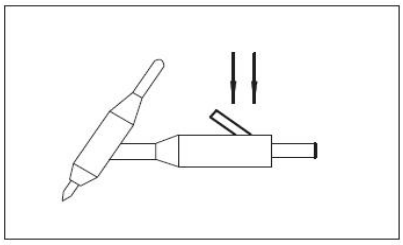

Fig. 4-4-3: Hold torch trigger

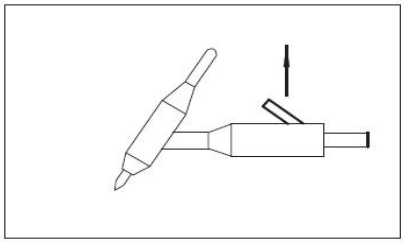

Fig. 4-4-4: Release torch trigger

2-step operation mode

a. Press and hold torch trigger to start welding

● Open solenoid valve, shielding gas will flow out to expel air from torch hose (pre-gas time depends on the hose length). Then HF ignition device works and arc starts.

● Output current continuously increases from initial current to welding current.

b. Release torch trigger to stop welding

● Release torch trigger, welding current will continuously decrease at a certain rate and time until it reaches to zero.

● The solenoid valve will continue to operate for a period of time (post-gas time), allowing the shielding gas to protect tungsten electrode and molten pool. Then the solenoid valve stops working, gas stops and welding finishes.

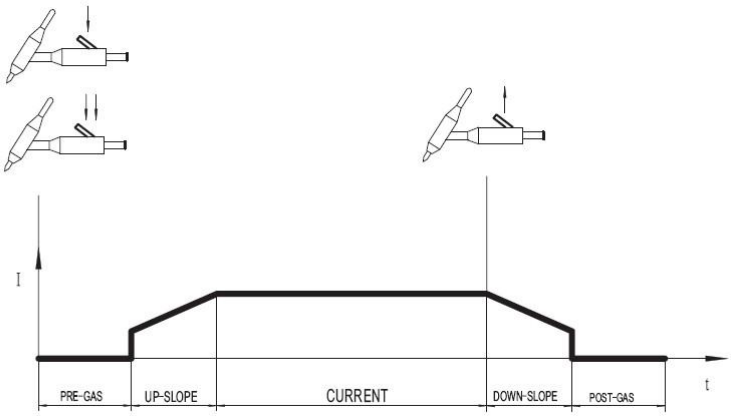

Fig. 4-4-5: 2-step operation mode

4-step operation mode

a. Press and hold torch trigger to start welding

● Open solenoid valve, shielding gas will flow out to expel air from torch hose (pre-gas time depends on the hose length). Then HF ignition device works and arc starts.

● Output current starts at initial current and time of initial current output depends on the time that torch trigger is pressed and held.

b. Release torch trigger

● Output current increases from initial current to welding current, and the time is called upslope time.

● If the initial current is not required, the torch trigger needs not to be held. Quickly press torch trigger to start arc, then quickly release it and output current will increase to welding current.

c. Press and hold torch trigger again when the welding completes.

● Welding current will continuously decrease at a certain rate until it reaches to crater-filler current and the time is called downslope time.

● Time of crater-filler current depends on the time that the torch trigger is pressed and held again.

d. Release torch trigger

● The output current is continuously lowered to zero and arc blowout. The solenoid valve will continue to work for the selected period of time (post-gas time), allowing the shielding gas to protect tungsten electrode and molten pool. Then the solenoid valve stops running, gas stops and welding completes.

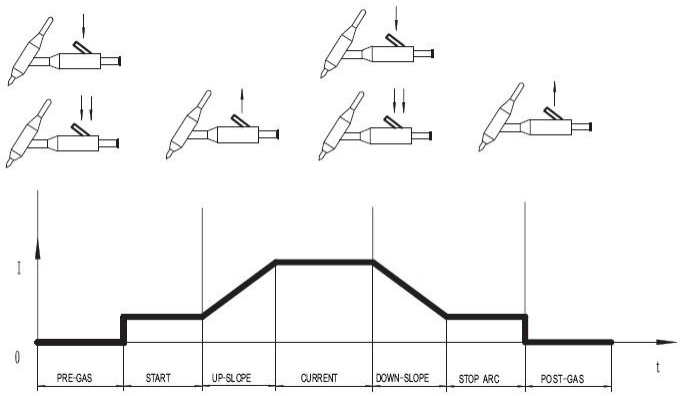

Fig. 4-4-6: 4-step operation mode

6. Parameter selection knob: clockwise rotation to select from left to right, anti-clockwise rotation to select from right to left.

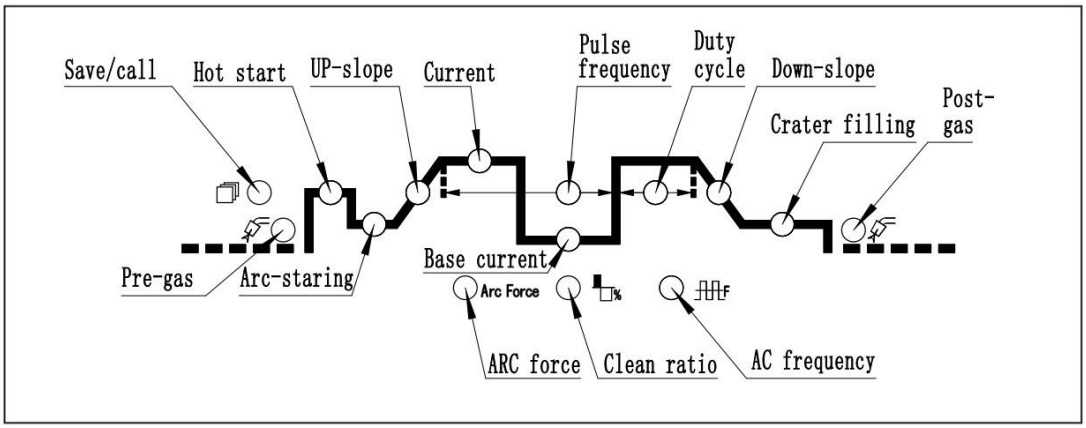

Fig. 4-4-7:Parameter indiactor

Indicator	Setting range			Factory setting	Functional description
Save/call	C01-C09 L01-L09			C01 L01	indicate when save/call program
Pre-gas	0.01 ~ 9.99S			0.3S	time elapse of gas flow before welding
Hot start	STICK	0 ~ 100A		60 A	hot start current on TIG mode
	TIG	40 ~ 100A			
Arc-starting	DC TIG	AC220V	3 ~ 210A	50 A	Arc-starting current,Used to control the

		AC110V	3 ~ 140A		heat input during arc starting
	AC TIG	AC220V	5 ~ 210A		
		AC110V	5 ~ 140A		
Up slope	0 ~ 10S			0.2S	Time elapse of welding current up slopes from arc starting current.
Current	DC TIG	AC220V	3 ~ 210A	100A	Welding current at CC welding or peak current at pulse welding
		AC110V	3 ~ 140A		
	AC TIG	AC220V	5 ~ 210A		
		AC110V	5 ~ 140A		
	STICK	AC220V	10 ~ 170A		
		AC110V	10 ~ 110A		
Pulse frequency	DC TIG	0.2 ~ 500Hz		4.0Hz	Frequency of AC pulse TIG or DC pulse TIG
	AC TIG	0.2 ~ 20.0Hz			
Base current	DC TIG	3 ~ peak current		10 A	Base current
	AC TIG	5 ~ peak current			
Duty cycle	5 ~ 95%			50%	Time ratio of peak current at AC pulse TIG/DC pulse TIG
Down slope	0 ~ 15S			0 S	Time of welding current slopes down to crater filling current
Crater filling	DC TIG	AC220V	3 ~ 210A	50A	Current value before arc blowout,For reducing craters and cracking tendency
		AC110V	3 ~ 140A		
	AC TIG	AC220V	5 ~ 210A		
		AC110V	5 ~ 140A		

Post gas	0.1 ~ 60S	5.0S	Time of gas flflow after welding finished
Arc force	0 ~ 100A	50A	arc force current on STICK mode
Clean ratio	-40 ~ 40%	-10%	time ratio of current for cleaning in AC TIG welding. ***1**
AC frequency	10 ~ 250Hz	60Hz	Frequency of AC TIG/AC pulse TIG

Table. 4-4-1:Parameter indiactor

***1**:**Important!** For AC TIG, cleaning width of welding seam and penetration can be changed by regulating clean ratio so as to obtain optimum welding quality

7.Parameter adjustment knob: adjust selected parameter. Clockwise rotate to increase value, anti-clockwise rotate to decrease value. Press this button to rotate for quick adjustment.

4-5 Sub menu

a.Press parameter selection knob ad AC/DC selection button for 3s, enter into sub-menu, select sub-menu parameters by rotating parameter selection knob; adjust current sub-menu parameters by rotating parameter adjustmentknob.

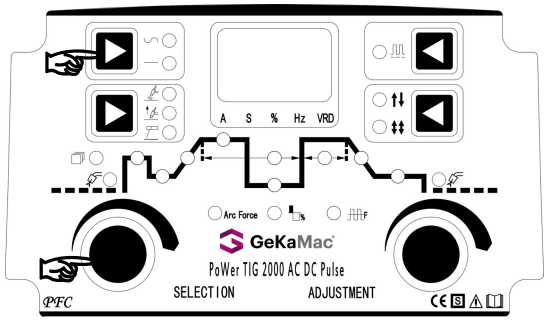

Fig. 4-5-1:Enter/exit Submenu

b.After fifinishing the setting, re-press parameter selection knob ad AC/DC selection button for 3 seconds, it will save the setting and exit from the sub-menu , and recover to regular interface.

Function setting	Code	Functional description	Factory setting
Panel/remote control	FP0	Panel control	FP0
	FP1	remote control	

Welding mode	FP5	TIG: 2-step and 4-step	FP5
	FP6	TIG: repeat mode (2-step and 4-step indicator lights simultaneously)	
	FP7	TIG:spot welding mode (2/4 step indicators do not light up)	
Arc start polarity selection on TIG mode	FP8	DC TIG: reversed polarity (DCEP)	FP9
	FP9	DC TIG: straight polarity (DCEN)	
VRD ON/OFF	FU0	STICK VRD ON	FU0
	FU1	STICK VRD OFF	
Water cooling ON/OFF	HOF	Water cooling OFF	——
	HON	Water cooling ON	
Clean ratio display mode	Fr0	Mode 1:-40%~40%, Default:0	Fr0
	Fr1	Mode 2:10%-90%, Default:40	
MMA hot start time adjustment	FXX	F0.2-F2.0 means 0.2S-2 Seconds	F0.5
TIG spot welding time adjustment	PXX	P0.1-P9.9 means 0.1S-9.9 Seconds	P1.0
SAVE/CALL	CXX	SAVE (C01-C10)	C01
	LXX	CALL (L01-L10)	L01

Table. 4-5-1: Submenu parameter

4-6 SAVE/CALL function

SAVE Function

Enter submenu,select channel CXX, press parameter selection knob and AC/DC selection button for 3s, save current program in this channel.On this time, save/call indicator lights up for 2s,save is successfully.

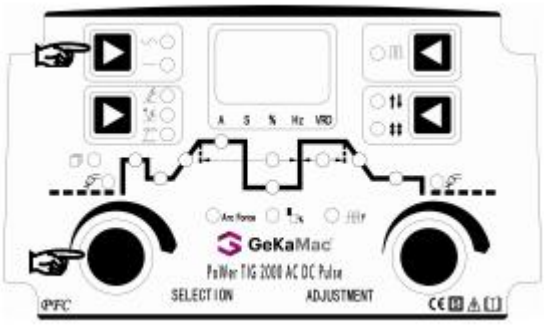

Fig. 4-6-1:SAVE operation

CALL Function

Enter submenu,select channel LXX, press parameter selection knob and AC/DC selection button for 3s, call

program, save/call indicator lights up, exit from submenu, start welding. At this stage, only can check parameter, can not advise parameter.

Exit from call mode: enter sub-menu,select needed channel no. LXX, press parameter selection knob and AC/DC selection button for 3s, save/call indicator lights off, exit from callmode.

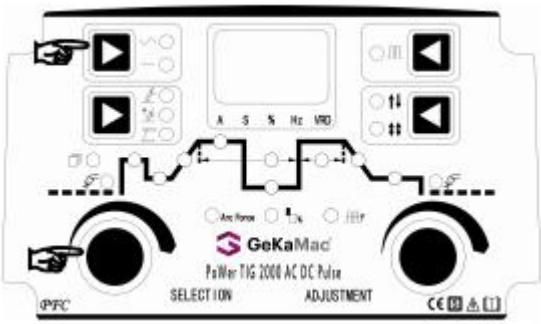

Fig. 4-6-2:CALL operation

4-7 Other functions

Restore factory setting: press function selection button and parameter selection knob at the same time for 3s, restore factory setting.

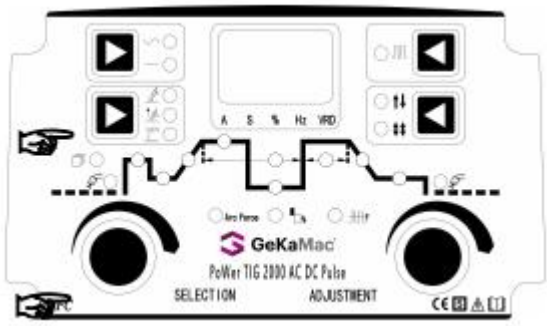

Fig. 4-7-1:Restore factory setting

Gas test: press parameter selection knob and pulse selection button at the same time for 3s, enter into gas test mode.

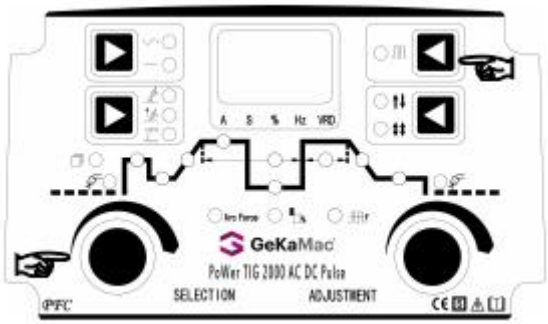

Fig. 4-7-2:Gas test function

4-8 Installation

Warning! Electric shock is very dangerous. If the machine is plugged into the mains electricity supply during installation, there is a high risk of very serious injury and damage.

Power supply and cable

Please note the size of fuse and circuit breaker in the table below are for reference only.

MODEL		PoWer TIG 2000 AC DC Pulse
Power supply		1phase AC220/230V±15%
Min. power capacity (KVA)	Power grid	7KVA
	Generator	11KVA
Input protection	Fuse	50A
	Breaker	60A
cable	Power cord	2.5mm^2
	Welding cable	16mm^2
	Protection cable	2.5mm^2

Table 4-8-1:Power supply and cable

The connection between input cable and distributor box

Warning!

- Never connection when equipment is power on!
- The connection must be carried out by a qualified electrician!
- Do not connect two units of power sources to the same circuit breaker!

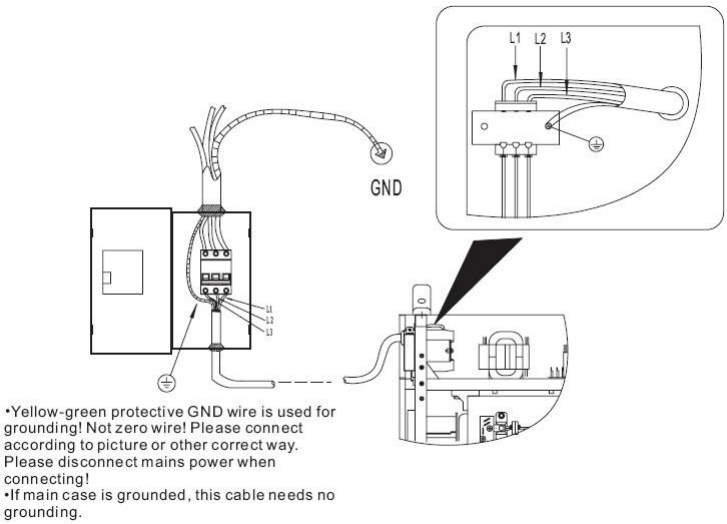

Fig. 4-8-1: Connection between input power supply cable and switch box

Gas regulator installation

Warning! The inert gas can be hazardous to your health. Work in a place only if it is well ventilated. Please do not use the shielding-gas cylinder until you have completely read and followed all the instructions about shielding-gas cylinder and accessories.

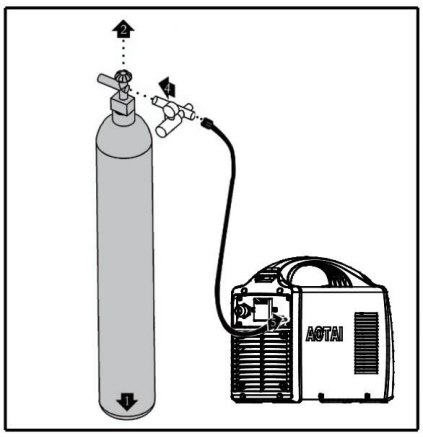

Fig. 4-8-2: Gas regulator installation

1. Place the gas cylinder in a flat place.
2. Remove the protective cap of the cylinder.
3. Briefly open the shielding-gas cylinder valve anticlockwise to blow off any dust and dirt.
4. Screw the pressure regulator onto the gas cylinder and tighten it.
5. Connect the shielding-gas connector to the pressure regulator.

The recommended gas flow is 5 ~ 20L / min.

TIG installation

Warning! Operating the machine incorrectly can cause serious injury and damage. Do not use the machine until you have read the following

- Safety rules

- Before putting the machine into service

Warning! If the machine is plugged into the mains supply and the mains switch is in "O" position during preparation, there is a high risk of very serious injury and damage. Only carry out preparation when the machine is unplugged from the mains and the mains switch is off.

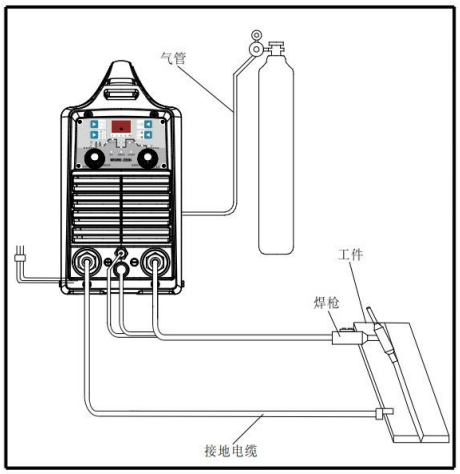

Fig. 4-8-3: TIG installation

1.Plug the ground cable into the output socket (+) and fasten it;

2.Connect the other end of ground cable to the work piece;

3.Plug the quick plug on the end of torch into the output socket (-) and fasten it;

4.Plug the two-pin plug of torch into the control socket of power source;

5. Plug the gas hose plug on the end of torch into the gas outlet of power source and screw it;

STICK installation

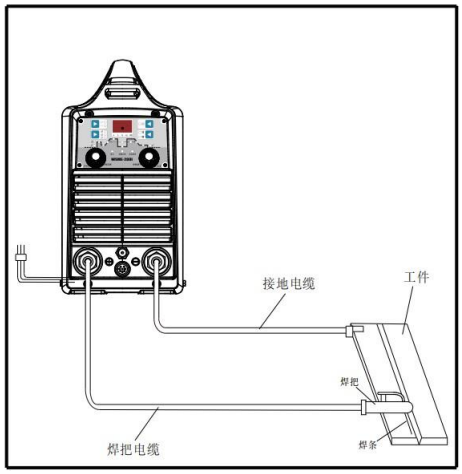

Fig. 4-8-4: STICK installation

1. Plug the ground cable into the output socket (-) and fasten it;

2. Connect the other end of ground cable to the work piece;

3. Plug the welding cable into the output socket (+) and fasten it;

4-9 Technical data

Note! Please use the machine under the allowed power supply voltage range marked in the nameplate.

Model		PoWer TIG 2000 AC DC Pulse
		Single input
Input voltage(V)		AC220±15%
Frequency(Hz)		50/60
Rated input capacity(KVA)		5.7
Rated max. input current (A)		25
Rated duty cycle(@40℃)		30%
Welding current (A)	MMA	10 ~ 170
	AC TIG (@60Hz)	5 ~ 210
	DC TIG	3 ~ 210
OCV (V)		60
Electrode diameter(mm)		1.5 ~ 4.0
Tungsten diameter(mm)		1.0-4.0
Weight(Kg)		11.5
Dimension L×W×H (mm3)		43×16×30
Maximum argon flow(L/min)		20
Insulation class		F

Table 4-9-1:technical datasheet

4-10 Disassembly and reassembly

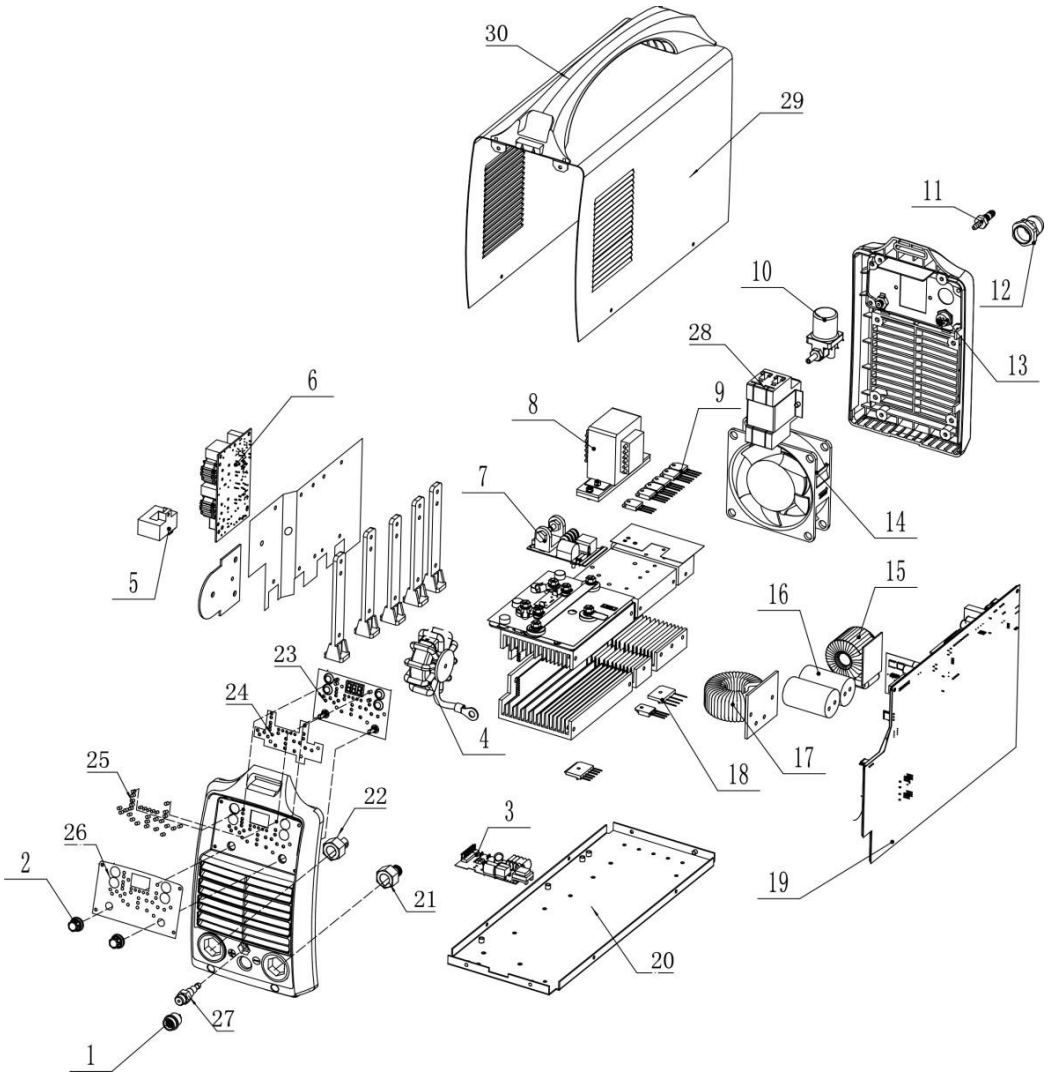

Fig. 4-10-1: Disassembly and reassembly

NO.	Item	Stock NO.	Remarks
1	Control socket	740001-00247	
2	Knob	780999-07776	
3	Anti common mode inductance	210250-00003	
4	Inductor	763004-00213	
5	Current sensor	753001-00024	
6	Over voltage protection board	220900-00319	

7	HF board	220900-00318	
8	Power transformer	763001-00310	
9	Diode	730001-00027	
10	Valve	752001-00045	
11	Gas connecotr	740012-00184	
12	water-proof clamp for cable	773002-00025	
13	Plastic rear panel	262011-00700	
14	Fan	746002-00025	
15	PFC inductor	763005-00145	
16	Aluminum electrolytic capacitors	722004-00146	
17	Main transformer	763002-00031	
18	Rectifier	735004-00006	
19	Main control board&drive board	210580-00972	
20	Bottom plate	261065-00353	
21	Quick sokcet（-）	740002-00094	
22	Quick sokcet（+）	740002-00080	
23	Display board	220503-00278	
24	Fixing plate for light guide column	766002-01220	
25	light guide column	779010-00048	
26	PC sticker	771001-01371	
27	Gas outlet nozzle	740012-00177	
28	Main circuit breaker	745011-00068	
29	cover	262047-00121	
30	Plastic handle	766003-02556	

Table 4-10-1: Main components list

5-REMOTE CONTROL KITS

The control interface of the welding machine can be connected to a foot pedal, with a current-regulated button-type torch, a current-regulated potentiometer-type torch, etc.

Control socket

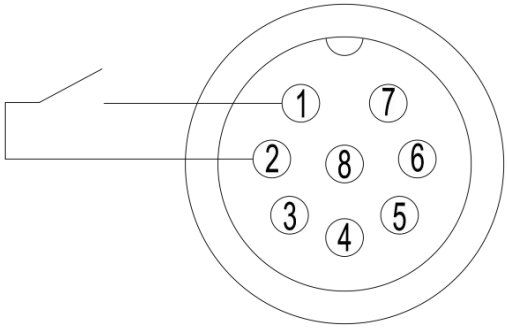

NO.	Definition of pin
1、2	Torch trigger
3、8	Judge whether there is current, and there is a sh ort circuit between 3 and 8 when there is current output
4	power supply 5VDC
5	Analog or special signal / digital remote control c urrent increase signal
6	Digital remote control current reduction signal
7	Signal ground

Fig. 5-1:Control socket

Table. 5-1: Pins function

Foot pedal

Foot pedal switch can be used for arc start control and welding current regulation. Welding current will switch utomatically to foot pedal control after the control plug is connected to welder's control cable socket. When the pedal is stepped on, the welder begins to work at welding current in line with the degree of the pedal being pressed. The max. current value is preset by the knob on the control panel.

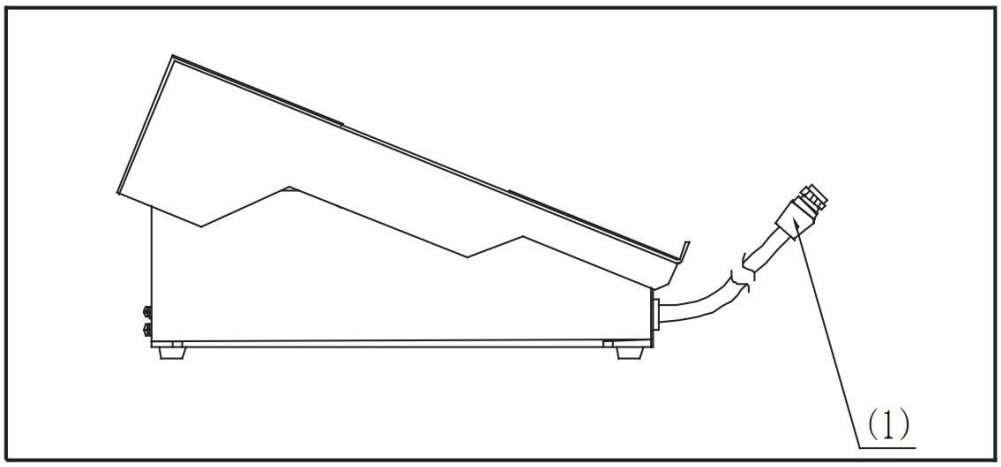

Fig. 5-2:Foot pedal

Current-regulated type torch

There are two types of current adjustable torch: button-type torch, potentiometer-type torch

Plug pin NO.	button-type	potentiometer-type
1	Red (trigger cord)	trigger (Red)
2	Black (trigger cord)	Trigger (Black)
3	-	
4	Green (power cord)	potentiometer power cord(White)+5V
5	Brown (digital signal cord 1)	potentiometer center tap (Green)
6	White (digital signal cord 2)	
7	-	
8	-	potentiometer ground (Brown)
	Note: this torch needs to weld a 0.25w/6 2k resistance between pin 4 and pin 6.	

6 –TROUBLE SHOOTING

Warning! An electric shock can be fatal. Before opening the machine:

-Switch it off and unplug it from the mains

-Unplug machine from the mains

-Put up a clearly legible and easy-to-understand warning sign to stop anybody inadvertently switching it back on again

-Check to make sure the electrically charged components (e.g.capacitors) have been discharged.

-Bolt in outer case also works for ground connection. Never use other bolt, which can not work for ground connection.

Error code

Error code	TROUBLE	CAUSES	REMEDY
E10	Torch trigger is normally closed	1. Torch trigger (foot pedal switch) keeps pressing when on open lode mode 2. Torch trigger cable is short circuit	1. Release trigger or check trigger 2. Check cable connection 3. Replace
E13	Arc stabilizing circuit is over current protection	Arc stabilizing circuit has problem	Check and repair
E16	Fan is abnormal	1. Fan motor is locked rotate 2. Fan is damaged	Check and repair
E19	Over heat protection	1. Inner machine is too hot 2. Temperature relay is damaged	1. Wait machine to cool down. 2. Replace

Table 6-1: Error code

Machine problem, cause and remedy

Note! The following troubles and causes are uncertain. However, during the normal welding, that might happen.

No.	TROUBLE	CAUSE
1	Indicator light does not light on and welding machine doesn't work when power on	1. The automatic air switch of the switchboard or welding machine power supply is damaged 2.Poor contact of input cable 3.The grid voltage connected to the input cable is not within the normal range 4.Fuse size (2A) is broken
2	When power on, the main circuit breaker immediately trips	1.Check the rated current of the breaker on the distribution box. After confirmation, replace the breaker of the distribution box with an breaker above D32. D60 breaker is recommended. 2.Check whether the power cord loose is short circuited or not. 3.Check whether the rectifier bridge on the main board of the welding machine is damaged, and replace it after confirmation. 4.Check whether IGBT and PFC diodes on the main control board of the welding machine are damaged, and replace them after confirmation.
3	On the TIG mode , pressing the torch trigger , gas outflow, no high frequency	1. Check whether the arc striking mode is HF mode, and switch to high frequency mode after confirmation. 2. Check whether the soft start board is damaged or not, and replace it after inspection and confirmation. 3. Check whether the inductance RA301 of the main board is loose or not , and reweld the inductance after confirmation. 4. Check whether the secondary inverter board is damaged or not,

		and replace it after confirmation. 5. Check whether the high frequency board is damaged or not, and replace it after confirmation. 6, check whether the spacing between the spark arresters on the high frequency board is too large or not, and confirm that the adjustment interval is 1mm.
4	press the torch trigger , there is high frequency discharge sound, no current output	1. Check whether the torch and ground clamp are broken or in poor contact, and replace them after confirmation. 2. Check whether gas outflow, and replace the solenoid valve after confirmation. 3. Check whether there is abnormal discharge inside the welding machine, and conduct insulation treatment after confirmation. 4. Check whether the welding machine secondary inverter board is damaged, and replace it after confirmation 5. Check whether the output diode RB251-258 is damaged, and replace it after confirmation.
5	Press the torch trigger , gas outflow, there is high-frequency sound and the display board digital tube flashes or the welding machine is restarted	1. Check whether the spark discharger gap of the high-frequency board is too large, and adjust the gap to 1mm after confirmation. 2. Check whether the output reactance lead falls off and touches the display board. After confirmation, fix the output reactance lead again to ensure that it is at least 3cm away from the display board. 3. Check whether the output reactance screw is loose and the insulation layer of the coil is damaged. After confirmation, fix it again and conduct insulation treatment.
6	Press the torch trigger, and the current will decrease when there is output current	1. Check whether the 1x2 / 3x2 harness inside the welder is loose or broken, and replace it after confirmation. 2. Check whether the chip inductors RA3 and RA4 on the main board fall off or break, and replace them after confirmation.

Table 6-2: Trouble shooting

7 –CARE AND MAINTENANCE

Before open the machine

Warning! An electric shock can be fatal. Before doing any work on the machine:

-Switch it off and unplug it from the mains

-Put up a clearly legible and easy-to-understand warning sign to stop anybody inadvertently switching it on again

-Check to make sure the electrically charged components (e.g.capacitors) have been discharged.

-Bolts in machine case also work for ground connection. Never use other bolt that cannot work for ground connection.

Maintenance

Please follow the instructions as below to ensure normal lifespan of power source.

- Conduct safety check at regular intervals (see “Safety rules”)

- Dismantle machine side panels and clean machine inside with clean and low-pressure compressed air by professional technician, not less than twice per year. Clean the components at a certain distance only;

- If a lot of dust has accumulated, clean the cooling-airducts.

Maintenance of water-cooled welding torch

For water-cooled welding torch:

- Check the connections of water cooling system

- Check the coolant level and cleanliness(clean coolant only)

- requently check coolant’s backflow state

Daily maintenance

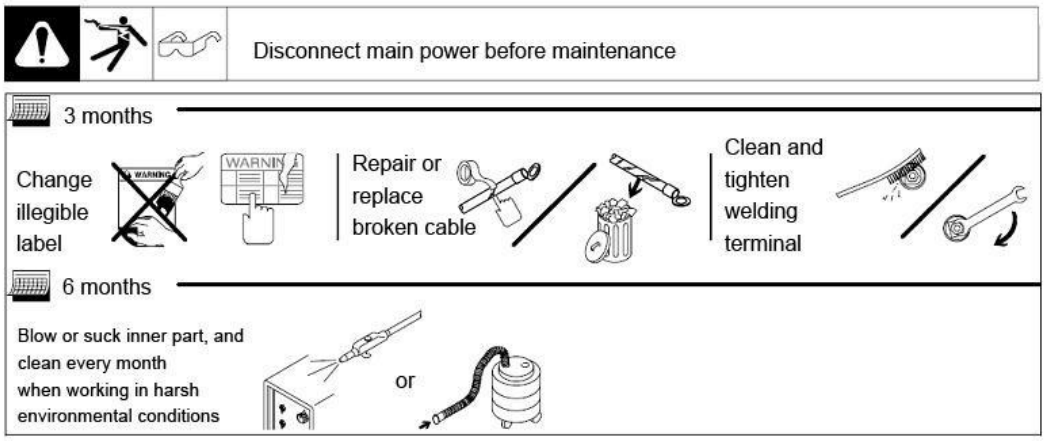

Fig. 7-1 Daily maintenance